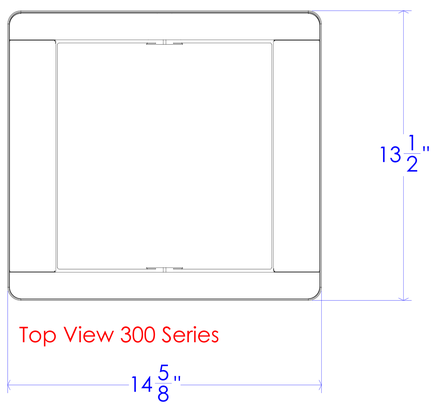

Top View 300 Series

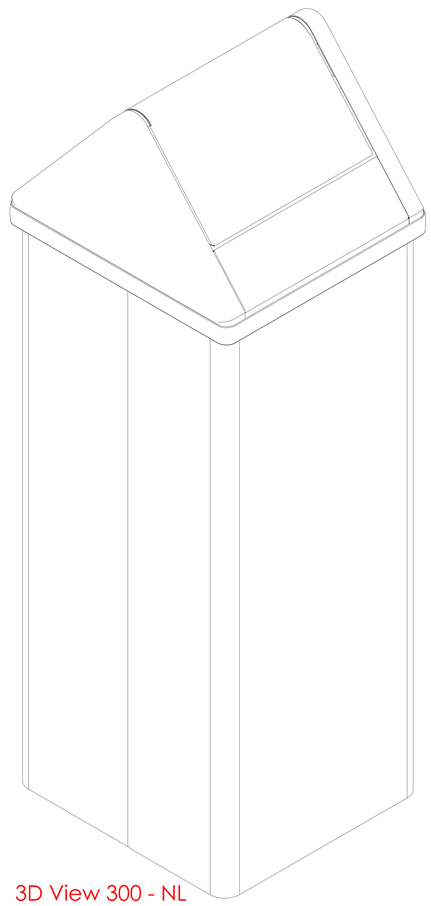

3D View 300 - NL

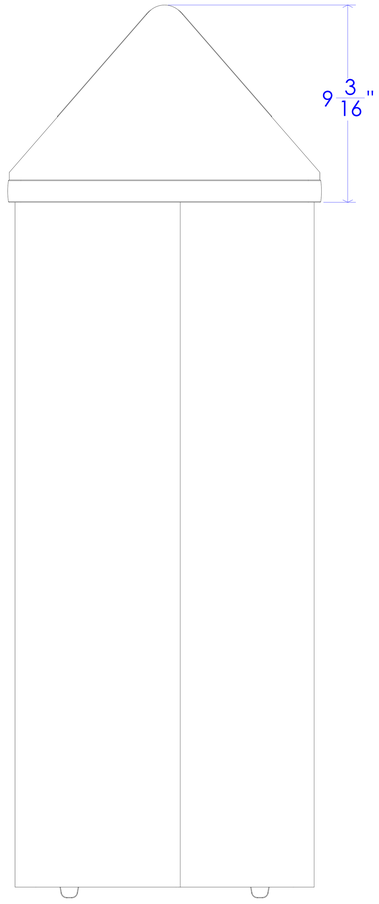

Side View 300 - NL

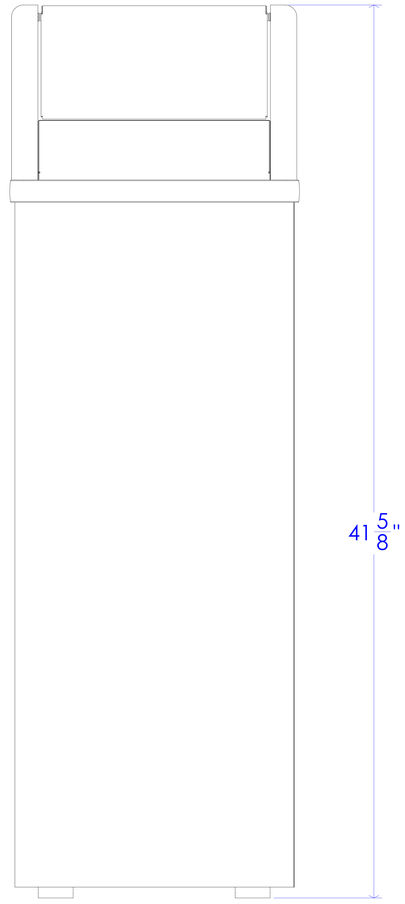

Front View 300 - NL

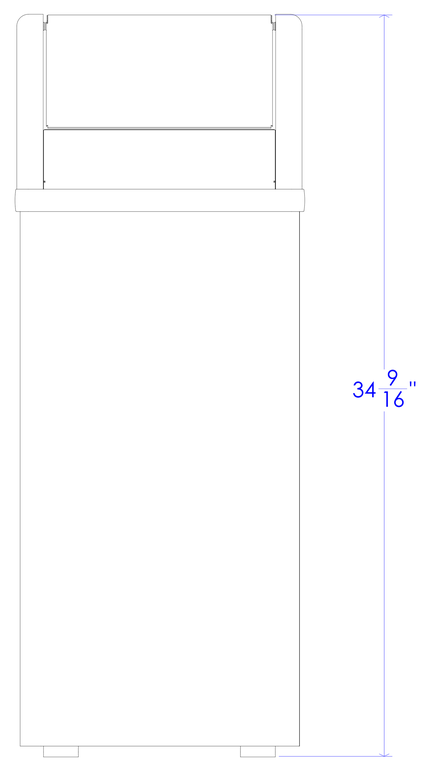

Front View 301 NL

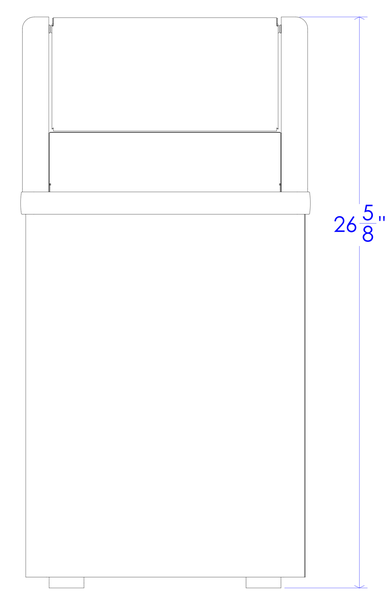

Front View 302 - NL

PROPRIETARY AND CONFIDENTIAL
THE INFORMATION CONTAINED IN THIS DRAWING IS THE SOLE PROPERTY OF FROST PRODUCTS LTD. ANY REPRODUCTION IN PART OR AS A WHOLE WITHOUT THE WRITTEN PERMISSION OF FROST PRODUCTS LTD. IS PROHIBITED.

FROST PRODUCTS LTD.
5280 JOHN LUCUS DRIVE, BURLINGTON, ON, L7L 5Z9

DATE: June 11, 2021	TITLE: 300 Series - Elevation	DWG NO. 300-Series
DO NOT SCALE DRAWING		
UNLESS OTHERWISE SPECIFIED DIMENSIONS ARE IN INCHES.		SCALE: 1:1